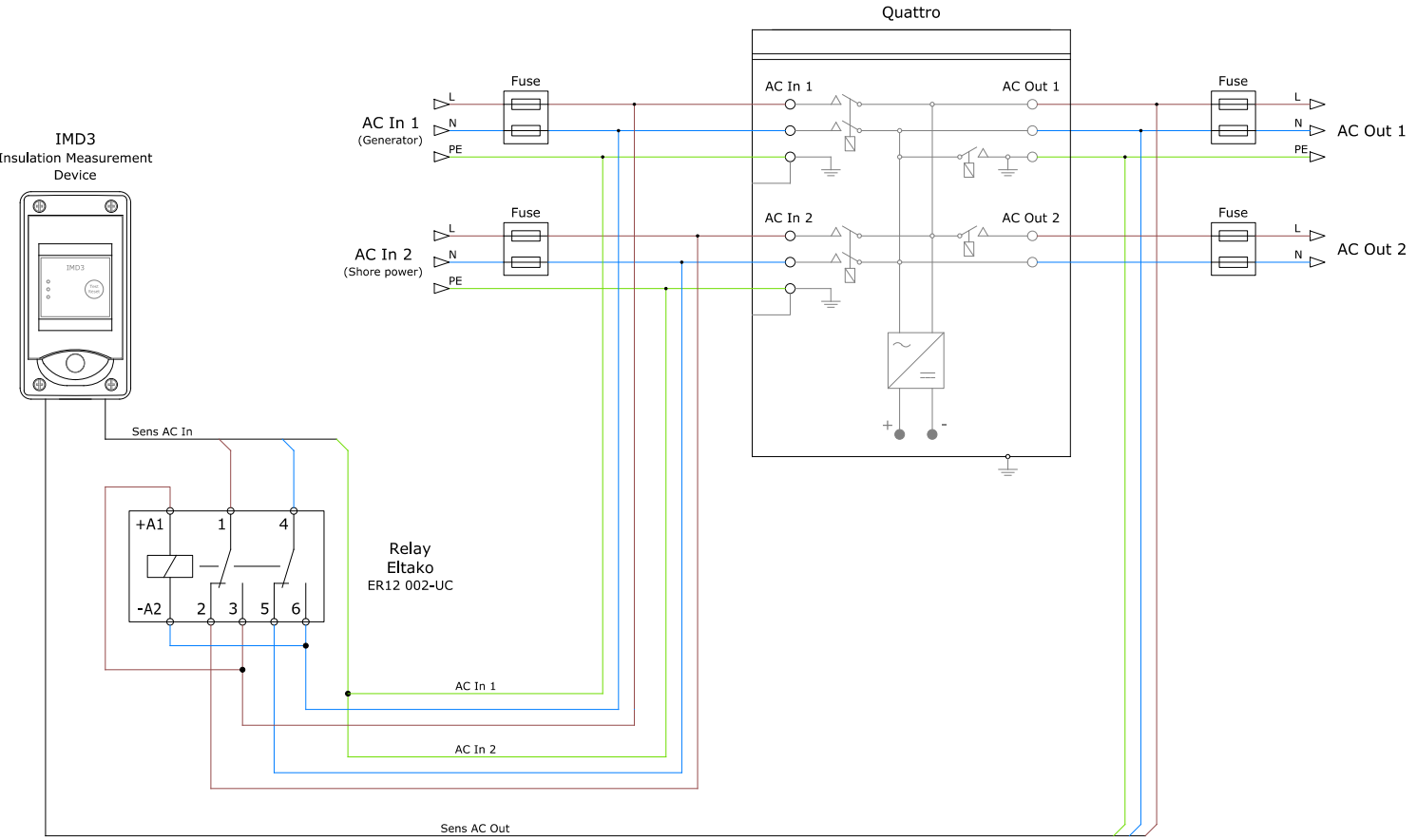

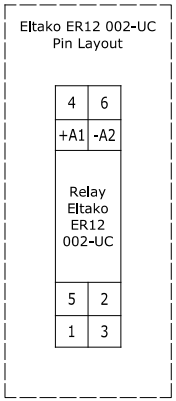

Disclaimer This drawing is intended as a guideline for installing and setup the system only. No rights can be derived from the drawing and additional setup information. It is prohibited to use the drawing and setup for systems or companies other than the stated company and project. The installation and recommended setup should be performed by a qualified electrician. Installing the system requires specialized skills and knowledge of all system components. Before installation the manuals of all components should be read and understood. It's the electrician's responsibility that all cables and fuses are correctly sized, according to the guidelines in the manuals and expected voltages and currents. Carefully read the setup instructions before any settings are made. Faulty configuration of the system components may lead to damage of the system. After installation all protection and control wiring functions must be checked and approved for a correct and safe functioning of the system. If any doubt about the installation or setup, consult Top Systems for advice.

STATE	ALTERATION	DATE	DRAWN	CHECKED
v1	For Approval	26-03-2025	HR	TG

top systems
Battery Based Solutions

top systems b.v.
Lemsteraak 6
2411 NC Bodegraven
Tel. 0031 (0)172 650737
www.top.systems
info@top.systems

IMD3 with VE Quattro
AC Connections

PROJ.No. TSE2025001

DWG.No. IMD3_Quattro_Web

A3

PAGE 1 OF 1